PENTAIR

pHorko®
industrial water purification systems

TECHNICAL SHEET

FLECK
TWIN VALVE SERIE 9000

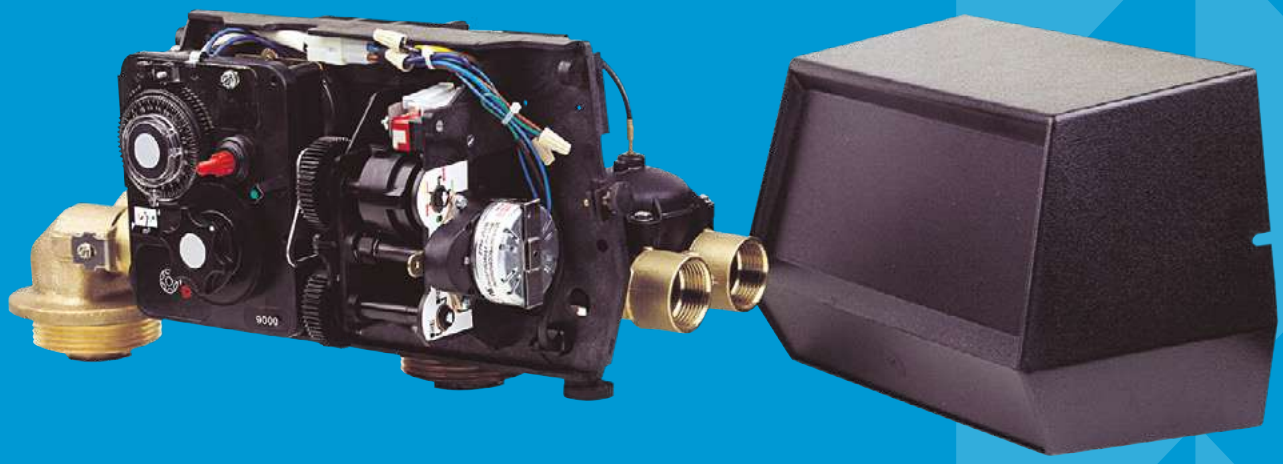

PENTAIR
pHorko®
industrial water purification systems

TECHNICAL SHEET



FLECK VALVE TWIN SERIE - 9000



TECHNICAL CHARACTERISTICS

- Soft water continuously, one tank in use, the second one in regeneration or stand-by
- Regeneration with softened water.
- Valve body in brass, which permit to adapt the hot water option up to 65°C
- Adjustable cycles
- Fast connection of the second tank, to order separately
- Upflow regeneration

TECHNICAL SPECIFICATIONS

VALVE SPECIFICATIONS

Material	Brass
Hydrostatic pressure	20 bar
Working pressure	1.8 - 8.5 bar
Working temperature	1 - 43 °C
Electrical rating	24 V / 50 or 60 Hz
Protection index	IP 22
Certificates	2004/108/CE, Electromagnetic compatibility 2006/95/CE, Low voltage D.M. 174/04, Italian norm

FLOW RATE (3.5 BAR INLET - VALVE ALONE)

	¾ inch	1 inch
Continuous (Δp = 1 bar)	4 m^3/h	4.7 m^3/h
Peak (Δp = 1.8 bar)	5.4 m^3/h	6.3 m^3/h
Cv*	4.8 gpm	5.1 gpm
Maximum backwash (Δp = 1.8 bar)	1.9 m^3/h	1.9 m^3/h

* Cv: Flow rate of valve alone in gpm at 0.07 bar pressure drop.

DOWN FLOW REGENERATION

	Mechanical	Electronic
Cycles	Adjustable	Adjustable
Time available	164 min	199 min each cycle

CONNECTIONS

Inlet / outlet	¾ or 1 inch BSP
Distributor tube	26.7 mm (1 inch)
Drain line	½ inch
Brine line 1600	⅜ inch
Mounting base	2 ½ inches - 8 NPSM
Height (from top of tank)	165 mm
Tank size application (recommended)	
Water softener	6 - 16 inches (150 - 400 mm)

METER

	¾ inch	1 inch
Accuracy range (± 5%)	1 - 57 Lpm	2.6 - 151 Lpm
Standard capacity range	0.5 - 8 m^3	1 - 20 m^3
Extended capacity range	2.5 - 40 m^3	5 - 100 m^3

REGENERATION CYCLES

Upflow	Down flow
1) Brine and slow rinse (Upflow)	1) Backwash (Upflow)
2) Backwash (Upflow)	2) Brine and slow rinse (Down flow)
3) Rapid rinse (Down flow)	3) Rapid rinse (Down flow)
4) Brine tank refill	4) Brine tank refill
5) Service	5) Service

OPTIONS

Regeneration	Upflow
Electronic	ET, SXT
Hot water	65°C
By-pass	Valve ¾ inch

DIMENSIONS

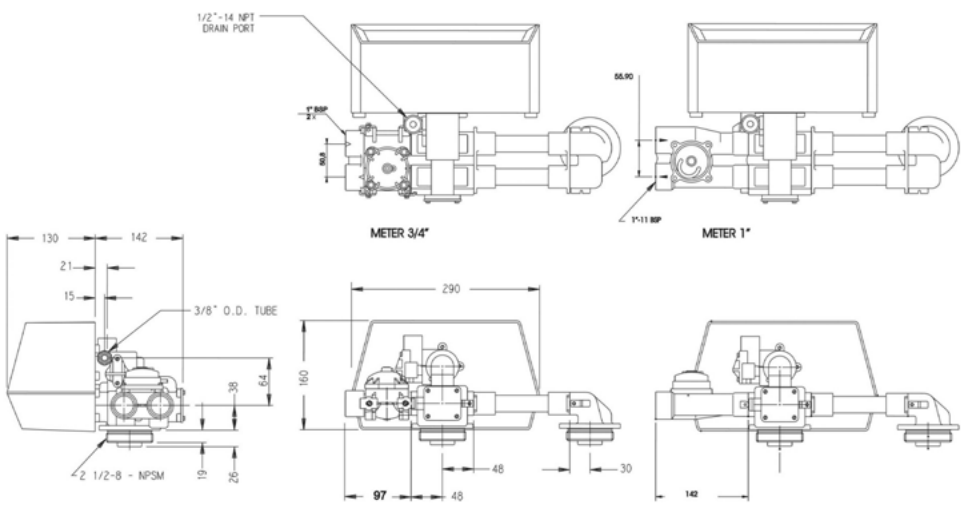

MKT-TS-021-EN-D